POKHARA UNIVERSITY

Level: Bachelor | Semester: Spring | Year : 2021
Programme: BE | Full Marks: 100
Course: Engineering Drawing | Pass Marks: 45
Time : 3hrs.

Candidates are required to give their answers in their own words as far as practicable.

The figures in the margin indicate full marks.

Attempt all the questions.

1 Draw an Archemedian spiral for convolution with a pitch of 40 mm. 14

2 A regular hexagonal plate having negligible thickness, is perpendicular to the HP and VP both and side AB 20mm long, is parallel to HP and 10mm above it. Draw its projections if the nearest corner (F) to the VP is 15mm in front of VP. 14

3 Draw the complete orthographic views of the given object. 30

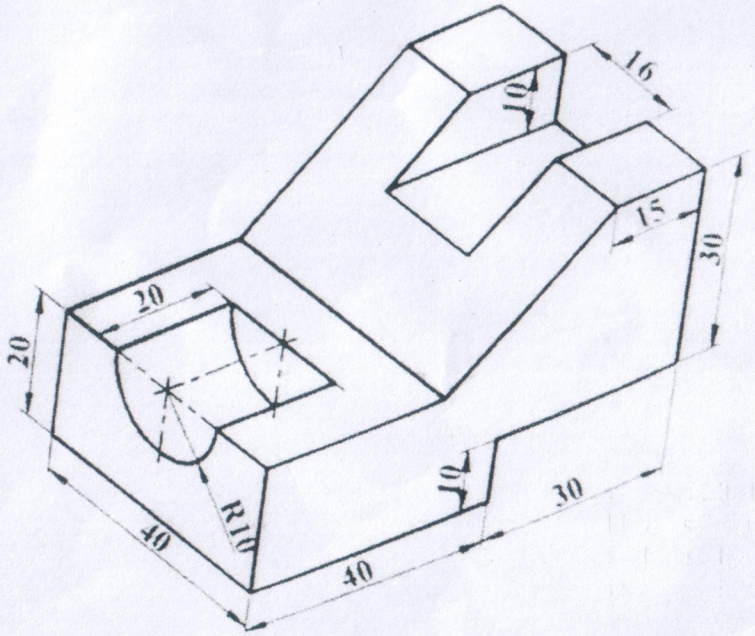

4 A Cylinder is cut by a cutting plane as shown in figure. Reproduce the given figure and draw: 18

i. Sectional top view.
ii. True shape of the section.
iii. Complete surface development of the object.

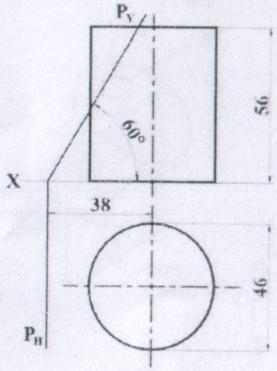

5 Figure below shows the detail of a Split Bearing. Draw the assembled front view with section. 24

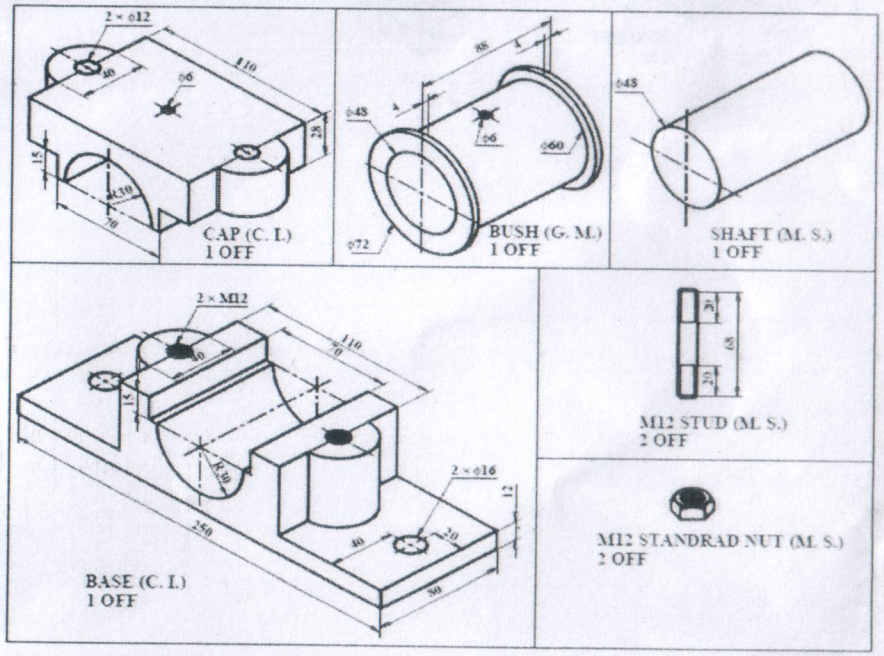

OR
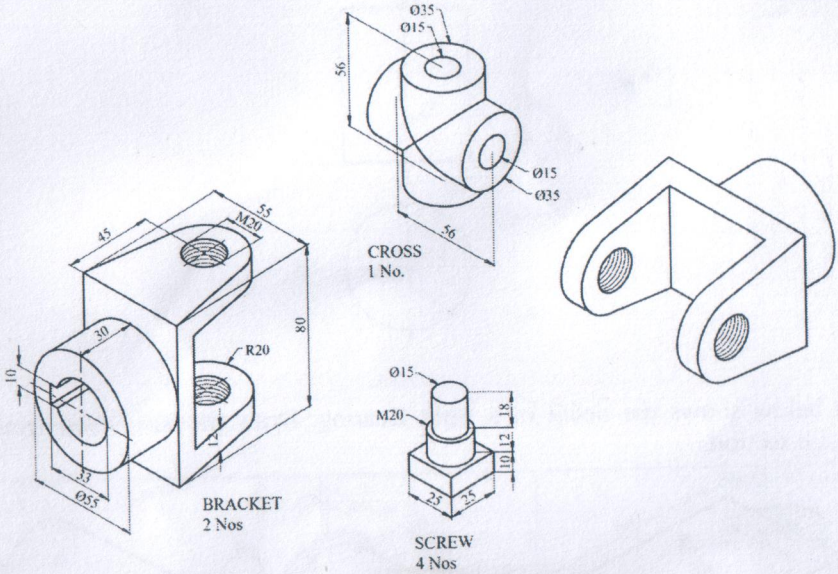
Assemble the given parts of Universal Coupling and draw its full sectional front view.